Design and Evaluation of a Novel Shooting Stand

by

Nathan Bastien

Natural Sciences, College of General Studies, 2013

Submitted to the Graduate Faculty of

University Honors College in partial fulfillment

of the requirements for the degree of

Bachelor of Philosophy

University of Pittsburgh

2013

UNIVERSITY OF PITTSBURGH

COLLEGE OF GENERAL STUDIES

This thesis was presented

by

Nathan Bastien

It was defended on

April 25, 2013

and approved by

Daniel Fisher, MS, School of Health and Rehabilitation Sciences

Ronald Poropatich, MD, Department of Medicine

Paul Pasquina, MD, Physical Medicine and Rehabilitation, Uniformed Services University

Thesis Director: Rory Cooper, PhD, School of Health and Rehabilitation Sciences

Evaluation of a Novel Shooting Stand

Nathan Bastien

University of Pittsburgh, 2013

A participatory action design method was used to create an adaptive shooting stand for use by athletes with disabilities competing in air rifle competitions. The design team worked with members of the Army Marksmanship Unit and an elite Paralympic athlete to establish design criteria. Essential criterion included: enhanced rigidity to reduce excessive movement; a low weight and compact design to reduce cost associated with travel and to assist in ease of equipment movement by athletes; compressible padding on the seat and table that would allow an athlete to assume and maintain a comfortable firing position for the duration of a competition. A convenience sample of 11 subjects was recruited to participate in a non randomized qualitative study at the 2012 Warrior Games to assess user satisfaction of the shooting stand. The shooting stand was found to meet equipment standards established by the International Paralympic Committee. A median of 60 of 100 was reported when subjects were asked if they agreed that the stand was stable and rigid enough to obtain a steady firing position, and a median of 80 of 100 was reported when subjects were asked to agree if they would choose this design when compared to commercially available options.

TABLE OF CONTENTS

LIST OF TABLES

LIST OF FIGURES

PREFACE

For their contributions to the completion of this project I would like to acknowledge the: National Science Foundation, the Experiential Learning for Veterans in Assistive Technology and Engineering (ELEVATE) program; the U.S Department of Veterans Affairs, Center of Excellence for Wheelchairs & Associated Rehabilitation Engineering. I would like to acknowledge the members of my committee, specifically my thesis advisor Dr. Rory Cooper, for contributions to my development as a scholar and professional. Guidance from Garrett Grindle, my post graduate school mentor, was instrumental in my success and I am grateful for the many hours he contributed to the completion of this study. I am thankful that the University Honor College, its distinguished faculty, and dedicated staff allowed me the opportunity to participate in the Bachelor of Philosophy program. I am honored that I was awarded the Georgia Berner Fellowship Award which allowed the completion of this research project. I would also like to acknowledge members of the Army Marksmanship Unit and Mr. Foth for expert advice throughout the completion of this project. I would like to thank the United States Olympic Committee and members of the Armed Forces for participating in the research study. Lastly, I would like to thank the outstanding staff at the Human Engineering Research Lab for their assistance throughout the completion of this project.

1.0 INTRODUCTION

Participation in sports and regular physical activity is beneficial and numerous studies have been conducted that demonstrate the physiological and psychological benefits of participation. Moses et al demonstrated that participation in moderate exercise has the ability to immediately reduce tension and anxiety and continued participation has the potential to reduce coping deficits in a study of 190 previously sedentary adults (Moses, Steptoe, Mathews, & Edwards, 1989). These benefits may be equally recognized by people with a permanent physical impairment. O'niell and Maguire conducted a study with 33 participants to assess a person's perceived benefit of participation in sport after receiving a permanent physical disability and concluded that 78.7% of participants reported an "…increases in fitness, quality of life, confidence, and social contact" (O'Neill & Maguire, 2004). A report from the Surgeon General states that people living with a disability are less likely to engage in physical activity than their able bodied peers despite the numerous benefits. The report claims that exercise need not be strenuous to achieve positive results and "…30-40 minutes of wheeling oneself in a wheelchair…" is equivalent to moderately intense exercise (Centers for Disease Control and Prevention, 1996). Tasiemski et al report that a common reason athletes with spinal cord injuries (SCI) choose not to participate in sports was their dislike of traditional "disabled sports" (Tasiemski, Kennedy, Gardner, & Taylor, 2005).

Competitive air rifle shooting overcomes this stigma by offering athletes the ability to participate in a traditional sport that may allow them to compete against their able bodied peers

while realizing the benefits of regular physical activity. Although a minimum amount of adaptive equipment is required for participation, athletes with disabilities that compete in competitive air rifle events have few options for adequate adaptive shooting stands and must often rely on their own ingenuity for creating an adaptive shooting stand. However, there is paucity in scholarly literature for the efficacy of a user designed shooting stand. This study was conducted to determine the effectiveness of a novel shooting stand created using a participatory action design method and hopes to guide future equipment development.

1.1 ADAPTIVE SHOOTING SPORTS

1.1.1 Paralympics

The Paralympic movement included innovators such as Dr. Ludwig Guttmann, a British neurosurgeon, whom arranged a competition in 1948 between groups of people with paraplegia, many of them veterans, in Stoke Mandeville. His small event has been recognized as a key event that provided the impetus for the movement (Gilder-Cooke, 2012). The first official Paralympic Games were held in Rome, Italy in 1960 and featured 400 athletes from 23 countries. The Games have since evolved into a worldwide competition involving over 60 countries. The Paralympic games, which obtained the name because they run alongside, or *parallel*, to the Olympic Games, have shared the same venue as the Olympic Games since 1992 and have evolved to become the second largest sporting event in the world, second only to the Olympics (International Paralympic Committee, 2013a).

Competitive shooting has been a Paralympic sport since 1976 and includes multiple events using 5.6mm (22 caliber) rifles and pistols, and 4.5mm (177 caliber) air rifles or air pistols (International Paralympic Committee, 2013b; International Shooting Sport Federation, 2013)(events 1.1.1.2). For the 10m air rifle event the athletes fire at a 80mm X 80mm paper target using the 4.5 mm, soft lead pellet pictured in Figure 1 (ISSF rules, 6.3.4). A maximum of 600 points are possible from a combination of 60 scored shots with a maximum of 10 points each. To receive a 10 an athlete must hit the center of the target. Each concentric ring is worth one less point with a minimum of 1 point. Shooting events, firing positions, and event specifics are discussed in section 1.1.1.1.

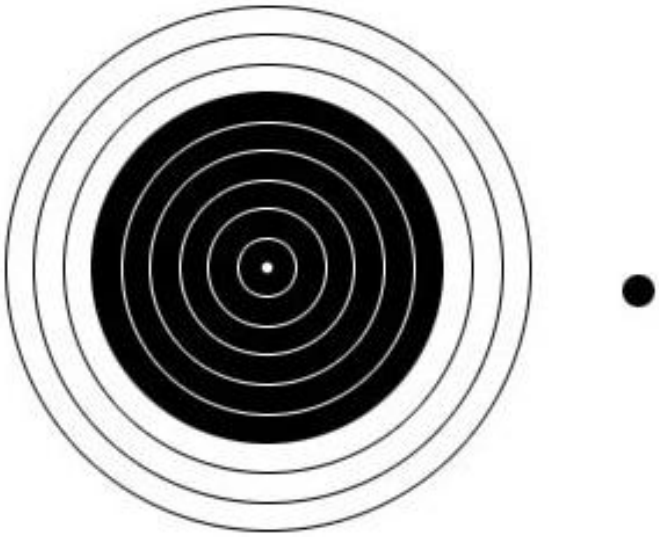

Figure 1 air rifle target and pellet diameter to scale

Athletes are eligible to participate if they have a qualifying condition listed in table 1 (Tweedy, 2009). Classification procedures are used to assess an athlete's limitations and ability in order to promote fairness among competitors. Oversight for classification is provided by the International Paralympic Committee (IPC) Classification Committee (International Paralympic

Committee, 2007) in conjunction with rules established by the International Shooting Sport Federation (International Paralympic Committee, 2007). Athlete classification is discussed in depth in section 1.1.1.2

Table 1 qualifying conditions for participation in paralympic shooting events

Qualifying Condition and Description
Impaired muscle power
With impairments in this category, the force generated by muscles, such as the muscles of one limb, one side of the body or the lower half of the body is reduced, e.g. due to spinal-cord injury, spina bifida or polio.
Impaired passive range of movement
Range of movement in one or more joints is reduced in a systematic way. Acute conditions such as arthritis are not included.
Loss of limb/limb deficiency
There is a total or partial absence of bones or joints as a consequence of amputation due to illness or trauma or congenital limb deficiency (e.g. dysmelia).
Short stature
Standing height is reduced due to shortened legs, arms and trunk, which are due to a musculoskeletal deficit of bone or cartilage structures.
Hypertonia
Hypertonia is marked by an abnormal increase in muscle tension and reduced ability of a muscle to stretch. Hypertonia may result from injury, disease, or conditions which involve damage to the central nervous system (e.g. cerebral palsy).
Ataxia
Ataxia is an impairment that consists of a lack of co-ordination of muscle movements (e.g. cerebral palsy, Friedreich's ataxia).
Athetosis
Athetosis is generally characterized by unbalanced, involuntary movements and a difficulty maintaining a symmetrical posture (e.g. cerebral palsy, choreoathetosis).
Leg-length difference
Significant bone shortening occurs in one leg due to congenital deficiency or trauma.

Paralympic shooting is an accessible sport that draws competitors from all over the world to include the United States. There are many opportunities available for athletes that wish to participate and regional clubs throughout the United States receive Paralympic affiliation to

promote the sport- there are more than 140 active clubs in more than 40 states (Team USA, 2013).

1.1.1.1 Athlete Classification

Athlete classification is used to promote fairness throughout competition. Athletes are classified based upon their functional ability as it relates to their chosen sport. Athletes that compete in shooting are provided with an alphanumeric classification code. The prefix SH, from the first two letter of shooting, identifies the sport that the classification profile applies to. A number from 1 to 3 indicates that the athlete is able to support the weight of the rifle, unable to support the weight of a rifle, or is visually impaired, respectively. Lastly, the designator A identifies an athlete that has the ability to stand during competition, and B or C indicates an athlete that uses a wheelchair and must sit during competition. Only athletes within the SH1 and SH2 classifications competed in the 2012 Paralympics because the SH3 classification, which includes athletes with visual impairments, is currently under review (International Paralympic Committee, 2007). Generally, athletes that have the ability to compete while standing are assigned to the SH1 category and include those athletes who have a permanent disability that prevents them from supporting the weight of a rifle.

All competitors in the SH1 class compete against one another regardless of subclass. Competitors eligible to stand are allowed only the use of medically certified orthosis or prosthesis designed for everyday use. An upper extremity prosthesis may be used as long as the terminal device does not grip the rifle. Those competitors eligible and that choose to stand must abide by rules set forth in ISSF; air rifle prone events require the use of a shooting table and chair versus lying on the ground, competitors must only use their arms to support the rifle, and if they use a shooting chair they cannot rest their arms on their hips, knees, or table top. Kneeling

events allow the support of only one elbow on the table top. Prone events allow the athletes to support their elbows, not their upper arm, on the table top (International Paralympic Committee, 2011). Subclasses are identified in table 2.

Competitors classified as SH2 are those identified as lacking the ability to support the weight of the rifle due to impairments in the upper limbs and are therefore allowed to use an adaptive rifle stand to support the rifle. The stand may be free standing or attached to a shooting chair. They are allowed to sit or stand during competition. All athletes classified as SH2 will compete against one another regardless of subclass. SH2 subclasses are identified in Table 2.

Table 2 subclasses for SH1 and SH2 classifications

Class and Description
SH1A
Sitting competitors that are able to stand and have normal trunk functions. No backrest is allowed on the shooting chair. These competitors may choose to stand to compete if they wish. If these athletes choose not to stand or use a wheel chair they must use a shooting chair.
SH1B
Sitting competitors who have non-functional lower limbs or severe problems in lower limbs and have good pelvis control (functional abdominal/spinal extensors, m.quadratus lumborum). A low backrest is allowed on the shooting chair.
SH1C
Sitting competitors with non-functional lower limbs or severe problems in lower limbs and fair/none trunk functions. A high backrest is allowed on the shooting chair.
SH2A
Sitting competitors who have one non-functional upper limb or severe problems with both upper limbs and have normal trunk functions. No backrest is allowed on the shooting chair. These competitors may choose to stand to compete if they wish. If these athletes choose not to stand or use a wheel chair they must use a shooting chair.
SH2B
Sitting competitors who have non-functional lower limbs or severe problems in lower limbs and have good pelvis control. A low backrest is allowed on the shooting chair
SH2C
Sitting competitors who have non-functional lower limbs or severe problems in lower limbs and have fair/none trunk functions. A high backrest is allowed on the shooting chair

1.1.1.2 Overview of Rules for Paralympic Sanctioned Shooting Events

Athletes with disabilities use the same weapons, ammunition, and targets as their able bodied counterparts. They also fire from the same distances but assume modified firing positions which are sanctioned by the International Shooting Sport Federation (International Paralympic

Committee, 2011). The firing positions assumed during a competition are standing, kneeling, and prone. Some events use only one position while others use a combination.

Athletes who are unable to stand unassisted are eligible to sit while competing but must adhere to the rules established by the ISSF. These rules are the same for able bodied competitors: the athlete must be free from additional support; athletes are not allowed to wrap a sling around their non-firing hand to increase their stability; athletes may place the elbow opposite of their trigger finger against their waist or chest for additional support (International Shooting Sport Federation, 2013).

The kneeling position, when assumed by an athlete using a shooting stand, allows the athlete to support one elbow on the table of the shooting chair, but the body must not come in contact with the table. Athletes that do not use a chair must adhere to rules set forth by the ISSF (International Shooting Sport Federation, 2013). The prone position allows athletes to rest both elbows on a table and simulates a competitor lying on the ground (Figure 2). The upper arms are not allowed to rest upon the table although the chest may lean against the table. Further details for proper positioning can be found in section 7.3 of IPC Shooting Rules and Regulations (International Paralympic Committee, 2011). Requirements for shooting chair specifications may be found in section 7.2 of the IPC Shooting Rules and Regulations (International Paralympic Committee, 2011).

Figure 2 prone firing position for adaptive air rifle events

Table 3 shooting events that allow the use of a shooting chair

Event	Gender	Class	Shots	Time
10m air rifle prone				
	Mixed	SH1 & SH2	60	1:30
50m rifle prone				
	Mixed	SH1 & SH2	60	1:30
50m three position				
	Men	SH1		
kneeling			40	1:15
prone			40	1:00
50m three position				
	Women	SH1		
kneeling			20	2:30
prone			20	

1.1.1.3 Equipment Standards

All information included in this section was paraphrased from the 2011 IPC Shooting Rules and Regulations (IPC Shooting, 2011) unless otherwise noted.

A shooting chair will be defined as any chair that is used by an athlete during a competition. This includes wheelchairs. A rifle support stand includes any device that is used to support the weight of the rifle which replaces the athlete non-firing hand. The stand may be free standing or attached to a table. A table is defined as a surface that is attached to a wheelchair, or one that is freestanding, and used during competition for prone or kneeling events. A table may be permanently affixed to a chair and would then be defined as a shooting stand. The device created for this study is defined as a shooting stand.

The surface of a shooting chair must be within five degrees of horizontal from the surface of the floor. The chair may be upholstered with a compressible material that is up to 5cm thick. Padding must be uniform and the depth is restricted to avoid offering and unfair advantage to competitors. Generally, the height of the barrel of the rifle from the ground must not exceed 150 cm but exceptions are allowed. The angle of a backrest is unlimited but must meet height requirements.

Backrests, if an athlete chooses to utilize one, must not deform more than 8cm when the athlete rests against it. Athletes within the SH1A and SH2A may use a backrest of any height between shots for resting only. The height of the back rest is user specific. Low back rests, utilized by athletes within the SH1B and SH2B category, may not exceed 40% of the athletes back. The length of an athlete's back is measured while they are erect and in the seated position from the surface of the seat to the seventh cervical vertebrate. The height of the high back rest, utilized by athletes within the C subcategory, is determined by measuring from the seventh

cervical vertebrae until 10cm under the armpit (axilla). The back rest may not exceed this height. Athletes that use a wheelchair during competitions must adhere to guidelines established for their classification.

Shooting tables may be utilized by competitors during prone and kneeling events. They may be free standing, affixed to a wheelchair, or in the case of this study, permanently affixed to a chair. The table top may be upholstered with a uniformed, compressible material with a maximal thickness of 2cm. The table top must be within 5 degree of horizontal to the surface of the ground.

1.1.1.4 Rules and Governing Bodies of Air Rifle Competitions

The International Shooting Sport Federation (ISSF), founded in 1907, governs both Paralympic and Olympic shooting events. The ISSF promotes and organizes world championships, and guides the development of shooting sports through education, medical, and scientific research principles (International Shooting Sport Federation, 2013).

For an athlete to be eligible for the Paralympics they must compete and qualify in competitions sanctioned by and approved by the International Paralympic Committee (IPC). The "IPC is (the) global governing body for the global Paralympic Movement and IPC Shooting is a brand of the IPC". The IPC promotes a drug free sport, creates or adopts regulations, develops classifications for athletes, organizes and hold events, grants approval and sanctions events. The IPC recognizes IPC competitions, the World Cup, and International Competitions. USA Paralympics is the United States National Paralympic Committee (NPC) and endorses the IPC (International Paralympic Committee, 2011). ISSF sport technical rules are integrated into IPC rules, which are an adapted version of the rules set forth by the ISSF. Both rule books (ISSF and IPC must be read in conjunction).

Each Paralympic sport has a sport technical committee (STC) that is responsible for technical aspects of the sport to include the development and maintenance of sport specific regulations and sport specific classification profiles. The STC is responsible for development of regulations, classification systems, and classification sport profiles (IPC).

Sport forums are responsible for oversight of technical aspects of Paralympic sports. The IPC Shooting Forum (SF) is composed of technical representatives, that include IPC members participating in shooting, that participate in formal forums to discuss topics of interest and provide consultations to ensure further development of the sport (International Paralympic Committee, 2010) ("IPC Handbook," 2010).

USA shooting (USAS) is a 501c3 non-profit corporation and the national governing body for shooting for the United States. USAS bylaws state that its mission "…shall be to prepare amateur athletes to win Olympic medals; to promote the Shooting Sports; to govern the conduct of international ISSF Olympic shooting in the USA." (p. 4) USAS is responsible for implementing and sanctioning local, state, regional, and national level events (IPC Shooting, 2012).

1.1.2 Military and Veterans Shooting Programs

1.1.2.1 Military Treatment Facilities (MTF) and Adaptive Sports Programs

Reports indicate that over 40,000 service members (SM) returning from Operation Iraqi Freedom (OIF) and Operation Enduring Freedom (OEF) are returning with permanent physical disabilities. SM's that incur and injury that requires long term care are typically assigned to a Warrior Transition Unit (WTU) at one of the major MTF's. Introduction to recreational sports is an integral part of the rehabilitation process (Goff, 2012). While assigned to a MTF the SM's are

encouraged to participate in adaptive sport programs as part of their rehabilitation plan. Adaptive sports programs use sports as a rehabilitation method and are an extension of the community reintegration portion of rehabilitation (Yancosek, Daugherty, & Cancio, 2008). These programs are utilized by SM's and the rate of participation at WTU's and other Wounded Warrior Programs has increased from 31% to 54% over past two years (International Paralympic Committee).

One of the many tools available to rehabilitative personnel and wounded SM's is the fire arm training simulator (FATS). The simulator uses a virtual environment and realistic military weapons that utilize CO_2 to generate recoil similar to actual rifles and, according to Yancosek et al, allow SM's to regain mastery of a "basic military skill" (Yancosek et al., 2008). This system has been beneficial to SM's recovering from injuries because it relies on performing a familiar task that provides instant feedback for the user. It has assisted SM's develop the skills necessary to adapt to their new abilities following injuries such as upper extremity amputations (Yancosek et al., 2008).

1.1.2.2 US Paralympic Warrior Games

The Warrior Games introduces active duty SM's within all branches of the United States military with permanent physical disabilities to Paralympic sports. The first annual event was held in Colorado Springs at the Olympic Training Center and U.S. Air Force Academy in May 2010, and over 200 athletes will participate in the upcoming 2013 games. It is an invitation only event that has the ability to identify those SM's that have the potential to succeed as Paralympic athletes in "…archery, cycling, shooting, sitting-volleyball, swimming, track and field, and wheelchair basketball." (United States Olympic Committee, 2013)

1.1.2.3 Paralyzed Veterans of America

Paralyzed Veterans of America (PVA) was founded by a group of veterans with spinal cord injuries (SCI) after World War II in 1946. It is a congressionally chartered organization that is dedicated to veteran services, medical research, and promoting civil rights for people with disabilities. The PVA has representatives in all 50 states to include Puerto Rico, and DC (Paralyzed Veterans of America, 2013). They donate equipment to military installations and state wildlife agencies, organize shooting events nationwide.

The PVA organizes independent air rifle and air pistol competitions. There are at least three events for the upcoming year (2013) and includes athletes with disabilities within all classifications established by the ISSF and IPC.

The PVA has co-sponsored, alongside the Department of Veterans Affairs, the National Veterans Wheel Chair Games (NVWG) since 1985. The NVWG's is an annual event that began in 1981 and according to VA, is now the "largest annual wheelchair [sporting] event in the world" (Department of Veterans Affairs, 2012b), hosting over 500 athletes in 2010. The games include over 15 events to include air rifle competitions (Department of Veterans Affairs, 2012a).

2.0 CURRENT SHOOTING STAND TECHNOLOGY

Eligible athletes who compete in sanctioned shooting competitions may utilize and shooting stand which satisfies the equipment standards established by the IPC (1.1.1.3). Novice athletes typically use commercially available products, which feature distinct table and stool, thereby lessening the rigidity of the stand (see Figure 4 for an example). Experienced athletes, instead, often utilize a custom stand where the stool and table are united by a common rigid frame thereby increasing stability (example, Figure 5).

3.0 METHODS

3.1 PURPOSE

The purpose of this project/study was to design and build a prototype shooting stand, utilizing a user centered design (UCD) methodology, which would be available for both novice and experience shooting athletes. According to Abras et al., a UCD method "…is a broad term to describe design processes in which end-users influence how a design takes place."(p. 1) This method requires the participation of the end-user during the initial design and evaluation phase and according to Preece (as cited in (Abras et al., 2004, p. 4), user involvement throughout the process will "lead to more effective, efficient and safer products and contribute to the acceptance and success of products." UCD should include the user from the initial design phase to measurable usability testing to determine effectiveness and utility among others (Abras et al., 2004).

3.2 DESIGN PROCESS

3.2.1 Client Interviews

The objective of client interviews and assessment of existing technology was to establish design criteria (Table 5) for development of the novel design using credible resources. Orthotic socket fabrication techniques (lamination) were observed to familiarize the design team with the process.

Members of the design team interviewed professionals within the shooting community who are collectively referred to as the *client*: Paralympic shooting Coach Bob Foth was interviewed during the 2011 NVWG (Foth, 2011); a 2012 Paralympic competitor was interviewed; members of the Army Marksmanship Unit (AMU), to include personnel responsible for fabricating and designing the technology currently used by the AMU, were interviewed (Olson, 2011). The weight and dimensions of the stand currently used by the client (Figure 5) was assessed and its immediate predecessors (Figure 3 and Figure 4) were examined. The dimensions of the shooting stand frame for the client's 2nd and 3rd version are identical. The major design changes from the 2nd to 3rd version are the use of aluminum versus steel and a redesigned table top. Assessment data for the third version of the shooting stand is presented in Table 4 and dimensions are presented in Figure 6.

Figure 3 second version of shooting stand fabricated and used by client

Figure 4 first version shooting stand purchased, modified, and used by client

Figure 5 current version (version 3) shooting stand fabricated and used by client

Table 4 assessment data for current shooting stand used by client

Construction Material	
Frame	Aluminum, 1 ¼” square tubing
Table Top	½” plywood
Dimensions	
Frame	
Length, front to back	39.75”
Width, feet	20”
Table Top	
Length	17”
Width	26”
Seat	
Length	9 ½”
Width	12”
Weight (reported)	28 lbs

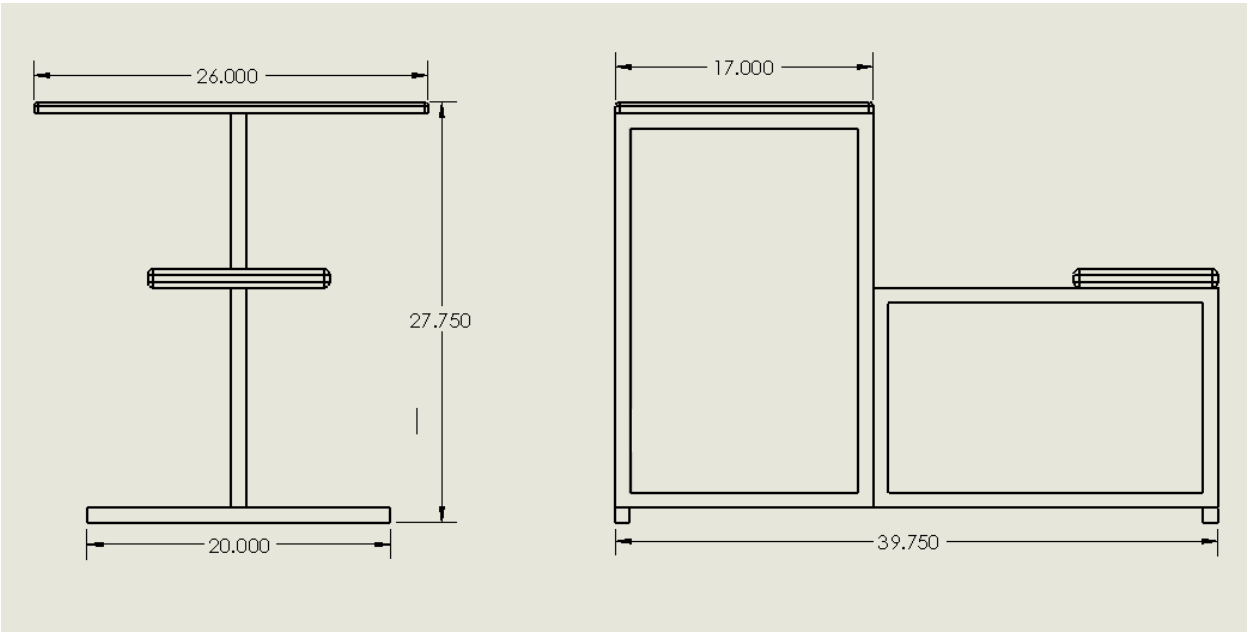

Figure 6 dimension of the third version of the clients shooting stand

Clients identified stand rigidity as the most important design factor and the elimination of excess assembly points and joints would assist in rigidity. Because the clients had already established the size of their optimal stand, through multiple trials of their own, it was identified that the optimal size would be that of their existing technology. Ease of assembly is important to reduce the amount of time that is dedicated to assembling and disassembling the stand before and after competitions, and for reducing anxiety prior to events. Low weight is essential to reduce cost associated with travelling during events and the clients expressed their desire for a stand fabricated from materials that would reduce weight without sacrificing rigidity. The clients wish for the novel stand to be compact when disassembled to further reduce the cost of transportation and shipping (the current technology utilized by the client occupies approximately five inches within the bottom of a 28” long by 18” wide rigid case). Clients requested that the novel technology have much space for freedom of movement while seated and for ease of egress and entrance. The use of adequate cushion on the table top and seat were also determined to be instrumental; the client stated that sitting for the entire 90 minute duration of the competition often caused numbness in his limbs. The client also requested an integrated level and rifle support stand; competitions do not always occur on level surfaces and adjustments to the shooting stand may be necessary to meet criteria established by the IPC. Design criteria established by clients are listed in Table 5 and the technology currently used is presented in Figure 5 along with measurements and data in Table 4.

Table 5 design criteria for fabrication of shooting stand established by clients

	Criteria
1	Size must be within IPC specifications and match current technology
2	Integrated rifle support stand which may be used by athletes that are unable to support the weight of a rifle
3	The stand should be lightweight to lower transportation costs and ease of assembly and maneuverability
4	The stand should be easily assembled to avoid excess use of time before and after events
5	A rigid table top is necessary to obtain a steady position for accurate shot placement
6	Padding firmness should satisfy requirements of IPC equipment standards but be soft enough to avoid parasthesia from prolonged periods of inactivity which are inherent in this sport
7	Much space should be found under that table top to allow freedom of movement and the stand should be easy to enter or exit
8	Integrated level on table

3.2.2 Presentation of Design

Solid works modeling software was used to design a three-dimensional (3D) model (Figure 7) using client established criteria and a small scale prototype was subsequently created using stereolithography (SLA) (3D printer). The model was presented to the clients for approval and a full scale prototype was subsequently created.

Figure 7 model of shooting stand created using 3D Solid Works

3.2.3 Fabrication of Prototype

The body and legs of shooting stand were fabricated from carbon fiber using techniques used by professionals within the prosthetic field. To utilize this technique the design team used a foam cast created from a mold that was fabricated using SLA and laser sintering (SLS) technology (Figure 8). The cast was then wrapped in multiple layers of biaxial woven carbon fiber sleeve and secured in a specialized bag designed for prosthetic fabrication (Figure 9, Figure 10 and Figure 11). A vacuum was applied to the bag and liquid polyurethane resin was added (Figure 12). The bag must fit tightly to reduce the amount of wrinkles present during lamination, and subsequently on the final product, and the creation of a custom shaped bag is optimal. The design team attempted to create custom bags with little success. The team produced the best results by

applying the vacuum and manipulating existing wrinkles into as few large wrinkles as possible. This produced fewer ridges of cured resin that required sanding. The newly formed part was then allowed to cure for 24 hours before being finished with fine grit sandpaper and clear coat for aesthetic quality.

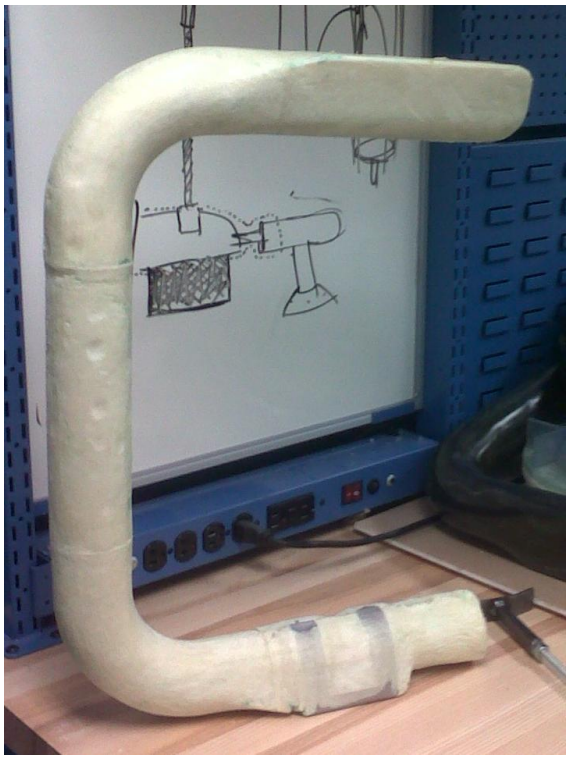

Figure 8 foam cast with integrated metal inserts prior to lamination

Figure 9 wrapping first layer of carbon fiber around foam cast of foot

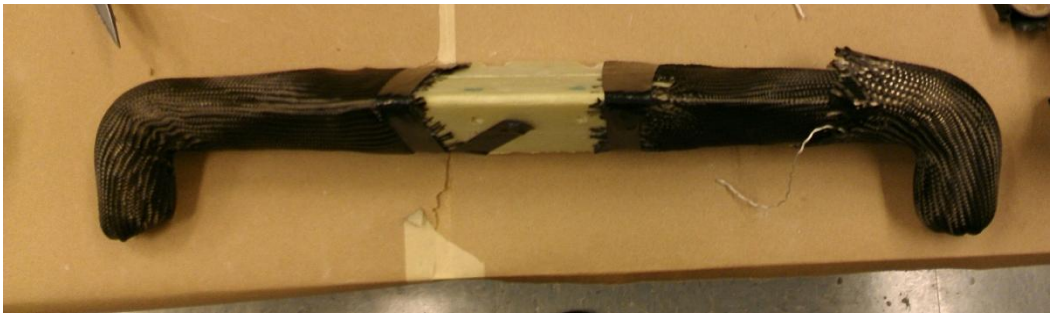

Figure 10 foam cast of foot with two layers of carbon fiber wrapped around corners

Figure 11 foam cast of foot with third layer of carbon fiber

Figure 12 foam cast of foot in lamination bag with vacuum applied (before lamination)

Three separate molds were created for the casts; frame front (Figure 13 and Figure 14), frame rear (Figure 15 and Figure 16), and foot (Figure 17 Figure 18). Each mold is composed of numerous pieces which were secured to a plastic sheet. The molds were designed to allow the integration of internal aluminum components which were embedded within the foam cast and can be seen in Figure 8. The aluminum components ensure proper alignment of the finished assembly and distribute the compressive forces applied by assembly hardware. The aluminum

components were exposed after lamination to allow the assembly of the stand. The internal component within the front of the stand for securing the adjustable table is shown in Figure 19.

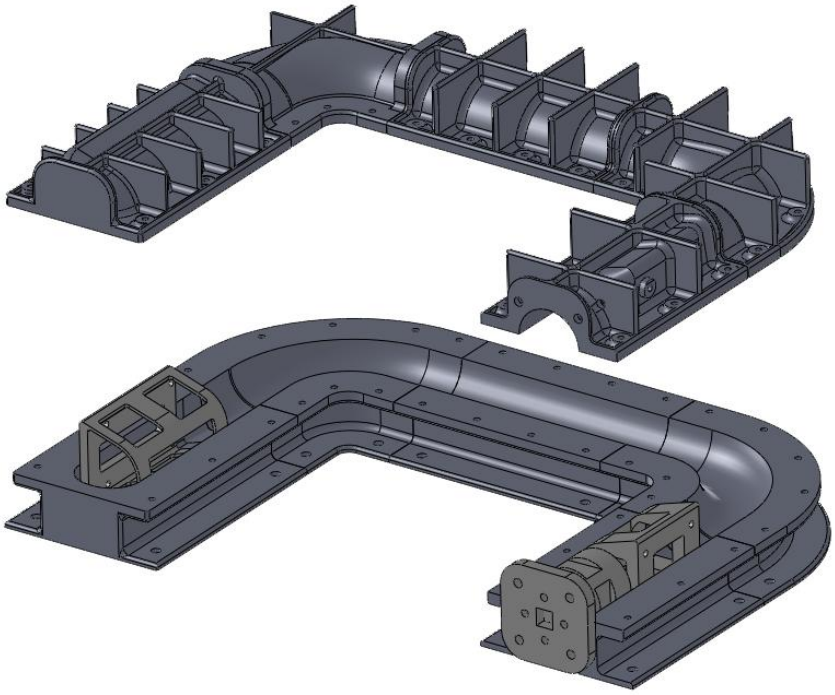

Figure 13 mold for front half of stand with internal components (light grey)

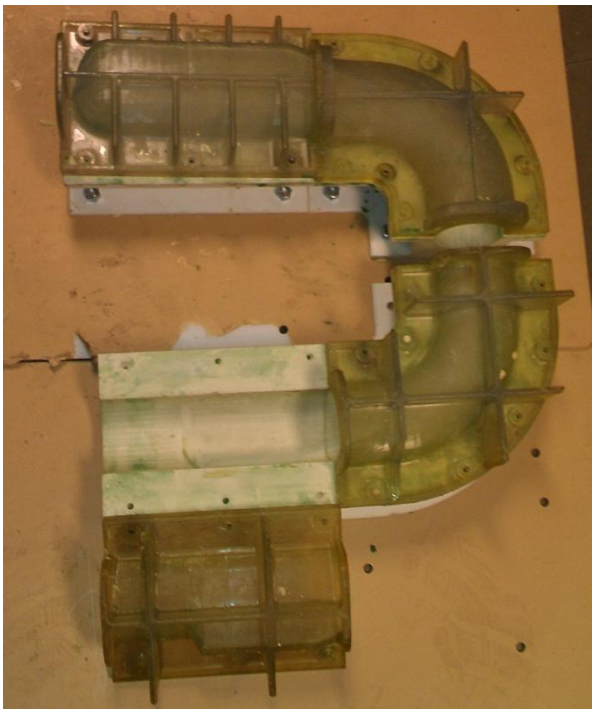

Figure 14 photo of disassembled mold for front half of stand

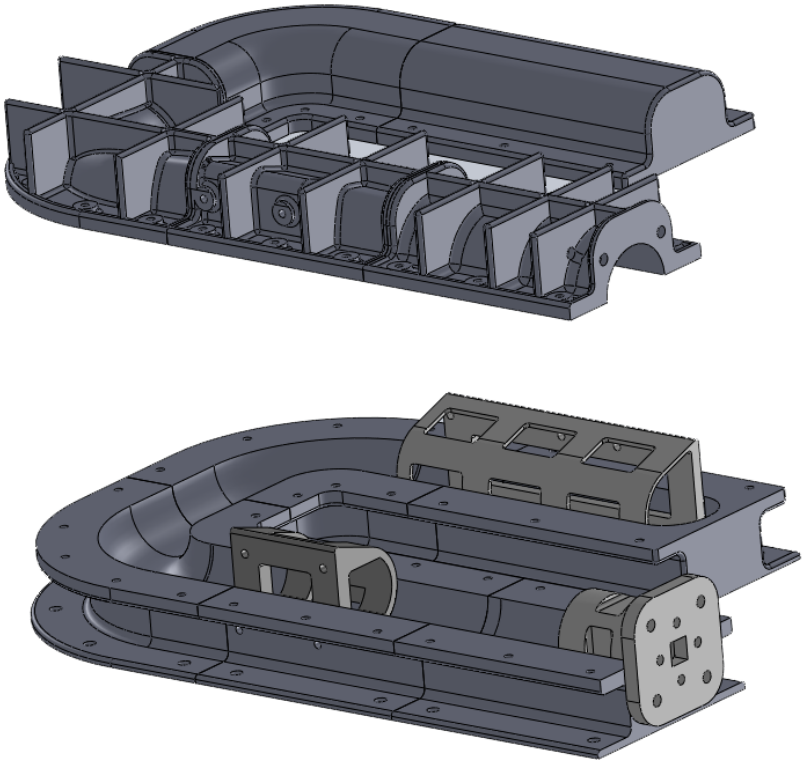

Figure 15 mold for front half of stand with internal components (light grey)

Figure 16 photo of mold for rear of stand

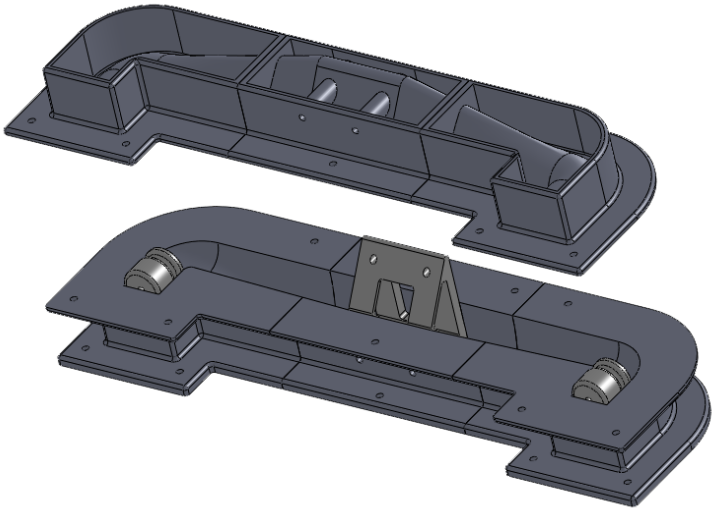

Figure 17 mold for feet with internal components (light grey)

Figure 18 photo of disassembled mold for feet

Figure 19 front of finished stand with aluminum inserts for table assembly exposed

The table top was created using two 1/16” carbon fiber sheets and ABS plastic (Figure 20). An exploded diagram in Figure 21 shows the plastic frame created to resist twisting forces, a plastic cross shaped template to resist compressive forces when attaching the table top to the

stand, and small plastic rings to add additional rigidity. The rings and template were laser cut while the frame was fabricated using a CNC mill. The entire assembly was connected using epoxy resin. A second table top with identical dimensions was later cut from 3/8” plywood, sanded, and finished for aesthetic purposes.

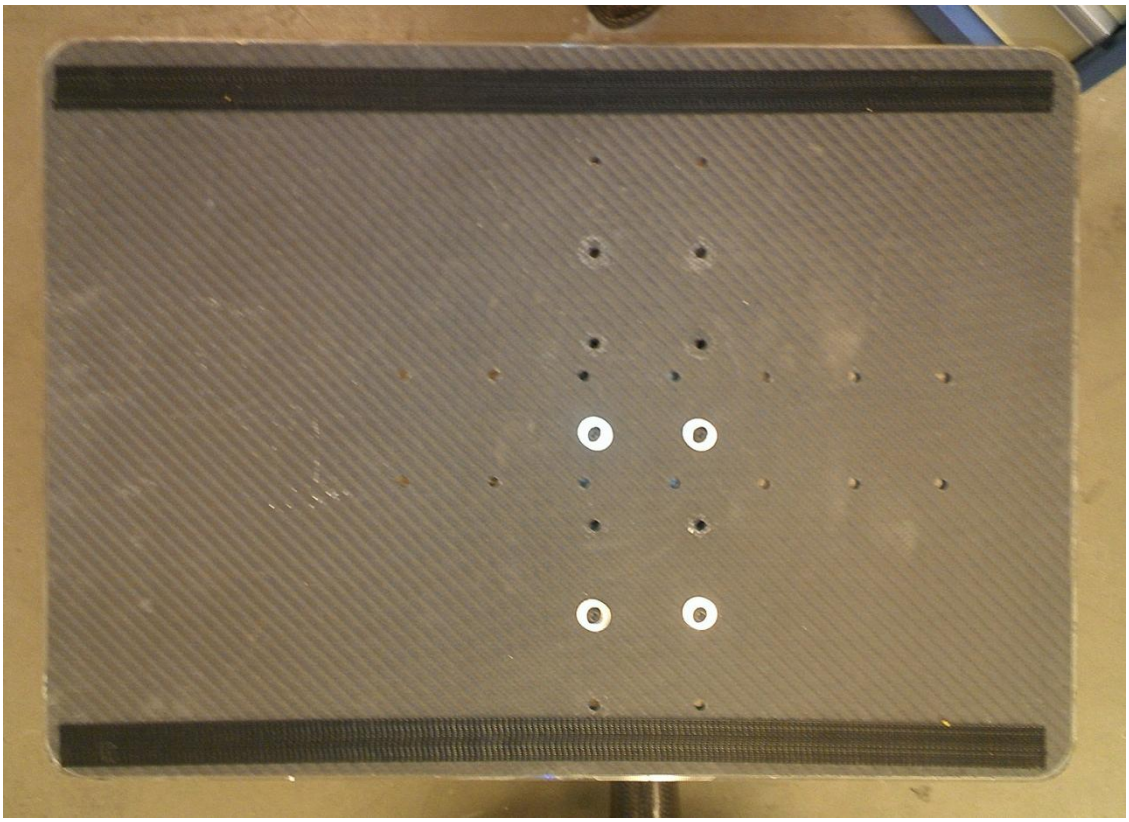

Figure 20 completed carbon fiber composite table top shown from the top.

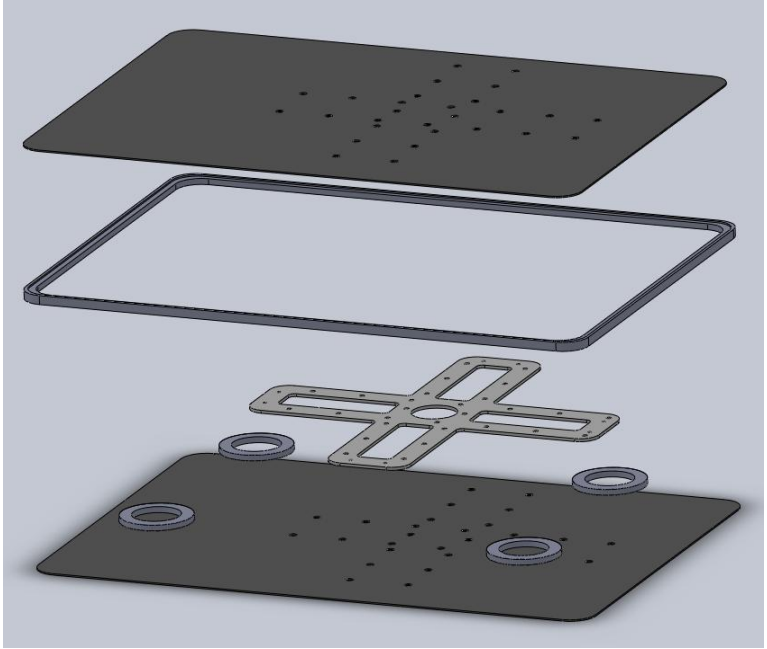

Figure 21 exploded view of table top components

The seat was constructed from 3/8“ thick carbon fiber sheet and is shown attached to the rear of the stand from above in Figure 22 . Commercially available, 2” thick foam padding was used to upholster the plate (omitted in the following figure).

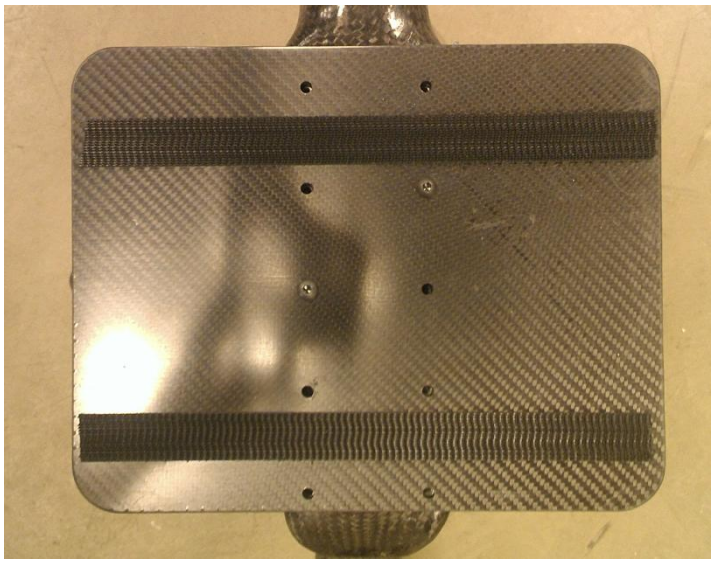

Figure 22 seat plate as seen from above and attached to the stand

3.2.4 Revisions

Test pieces were constructed to determine the rigidity and estimate the weight of the novel stand. Members of the design attempted to sit on the test piece for the rear of the shooting stand but abandoned the attempt because the piece was unable to support body weight without flexing less than two inches. It was hypothesized that the instability resulted from inadequate resin impregnation, too few carbon fiber layers, or design flaws.

The piece was bisected and examined (Figure 23) and it was determined that there was adequate resin coverage. The final prototype was fabricated using three layers of carbon fiber throughout with an additional fourth layer in the corners. The corners were also buttressed to eliminate the possibility to poor structural design as a contributing factor to the instability. The buttresses were cast in foam after designing molds in Solid Works (Figure 24) that were compatible with the design as it already existed and attached to the finished molds.

The table top was determined to have excessive flex after formal testing (Figure 26). A table top with identical dimensions was created from .5” plywood. The design team chose to create a plywood table top because this is what is used on the client’s current stand. The design team also considered fabricating a table top from a honey comb core encased in carbon fiber sheets but disregarded the option due to excessive costs. A foam core may also be an effective, light weight alternative to plywood, but was not attempted due to time and cost constraints.

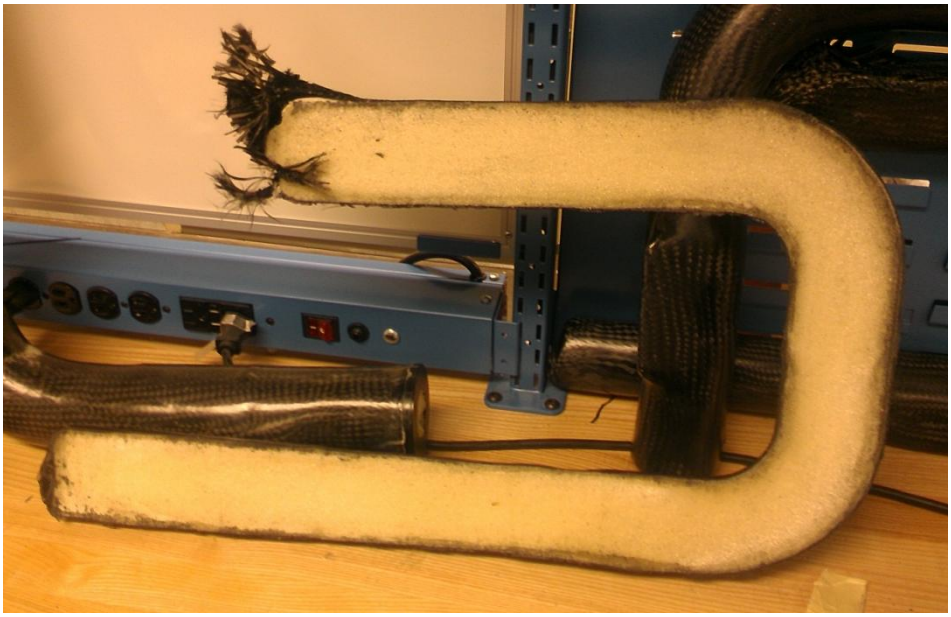

Figure 23 cross sectional view of bisected test piece

Figure 24 mold for corner buttress

3.2.5 Evaluation of Prototype

The dimensions of the shooting stand and weight of the assembly and individual components was obtained and is presented in Figure 25 and Table 6 respectively. The shooting stand measures 39.75” from the front most edge of the table top to the end of the seat frame (measured from left to right in Figure 25). The feet are 20” wide and indicate the width of the shooting stand. The wooden table top measures 26” wide, 17” long, and ½” in depth. The carbon fiber table top shares the same width and length and measures 5/16” thick. The seat plate measures 9.75” in length by 12.25” in width and 3/8” deep. The cushion shares the same length and width with an overall thickness of 2”.

Table 6 weight of individual components

Component	Weight (lbs)
Seat	
Seat cushion	.628
Seat Plate	1.759
Table	
Table, Carbon fiber	4.125
Table, Wood	3.8
Frame and feet	
Feet, combined weight	3.863
Seat support	7.026
Table Support	6.673
Overall (as tested at Warrior Games)	24.074
Overall (using wooden table top)	23.749

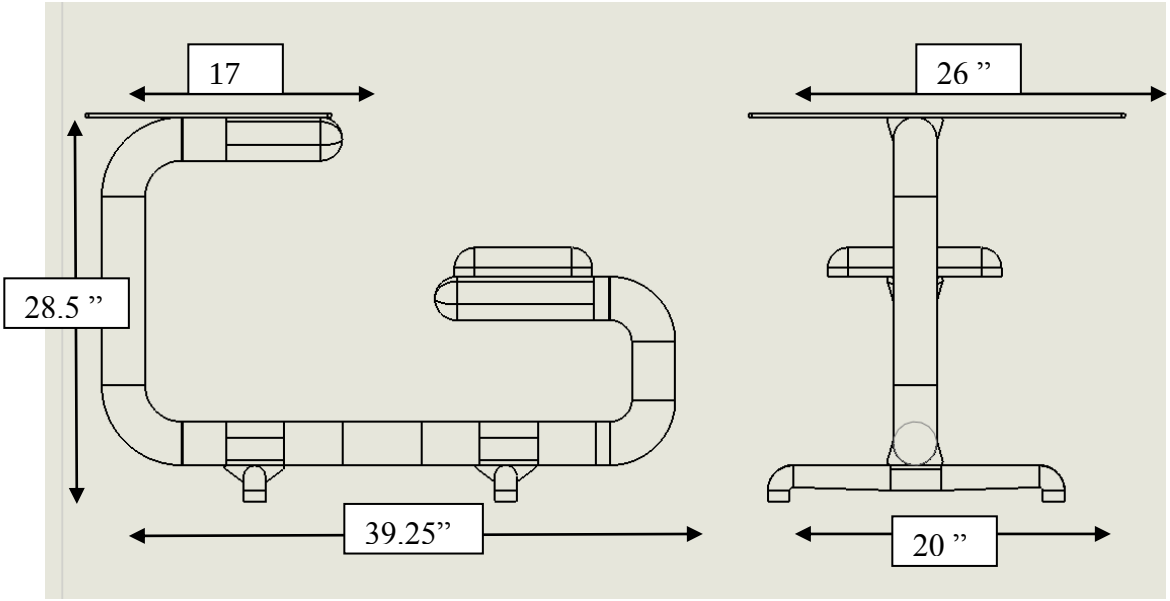

Figure 25 novel shooting stand dimensions

Deflection of the carbon fiber and wooden table tops were measured with varying weights. A block of known height was placed directly below the edge of the table as determined by a level. A common weight was then applied at the front, left of the table top and the deflection was measured using a scale. This procedure was repeated for ten different weights up to 40 pounds. The deflection in inches was then regressed on weight for both table tops and is depicted in Figure 26.

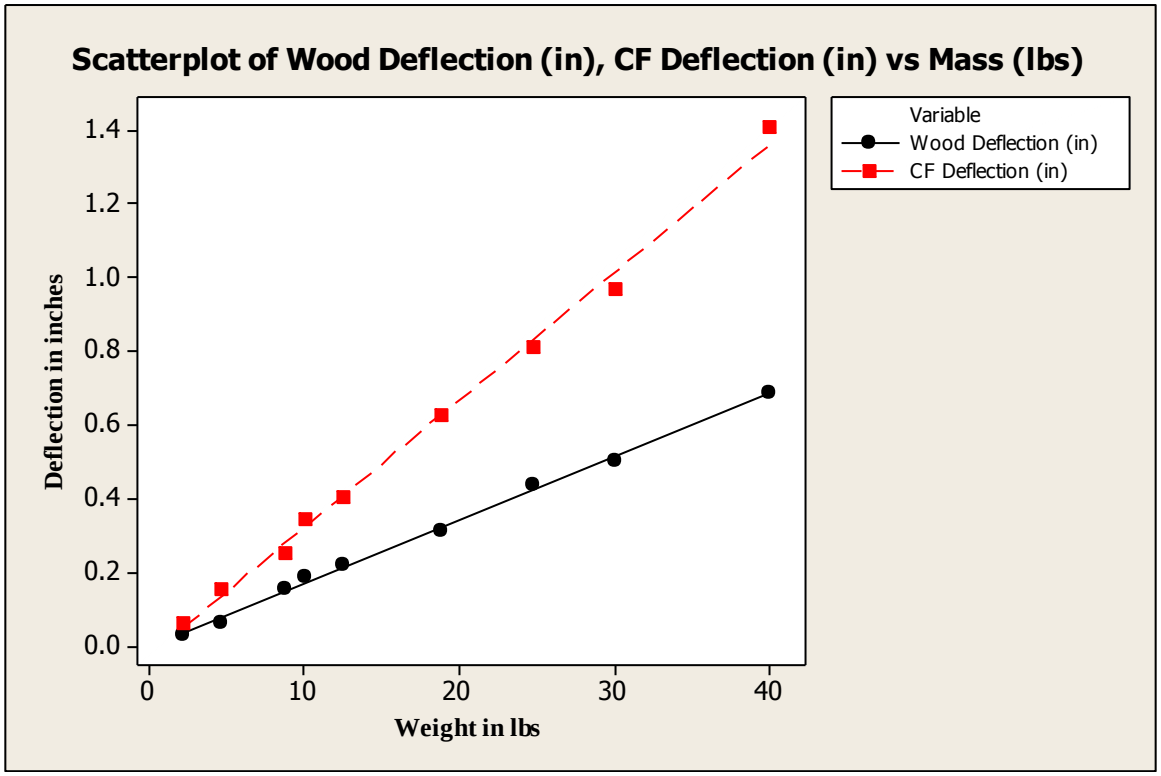

Figure 26 scatter plot depicting deflection of carbon fiber versus wood table top

3.3 WARRIOR GAMES PROTOCOL

3.3.1 Research Design, Clinical Relationship and Significance

We conducted a non-randomized qualitative study to assess user satisfaction with a novel shooting stand design. Qualitative data was collected and analyzed for use in improving future designs. Information gathered from participants in this study will provide clinicians, coaches, and athletes with useful information regarding the selection of features for shooting stands. These findings may lead to improved equipment designs and fitting techniques.

3.3.2 Survey Development

The survey was created based upon design criteria established by professionals and athletes within the air rifle community. The purpose of the survey was to assess whether the novel stand met design criteria presented in Table 5. Questions were presented in a manner to avoid leading subjects. Two of four questions on the linear visual analog scale were presented in a negative manner to and were seeking disapproval from the subject. The questions were presented in this manner to avoid leading the subject into a positive response. A visual analog scale was used to assess subjective qualities of the shooting stand and allowed the summarization and analysis of quantitative versus categorical data. Open ended questions were used for a structured interview to allow subjects the opportunity to comment freely and allowed researches to use cluster analysis to identify common themes.

3.3.3 Methodology

A convenience sample of eleven participants was recruited during the 2012 Warrior Games at the Olympic Training Center in Colorado Springs, Colorado. Participants must have been at least 18 years of age with a permanent impairment that allowed them to participate in air rifle events. First, informed written consent was obtained from each subject by one of three investigators. Next, the subjects were asked to complete a demographic survey (Section 1.01(a)(i)Appendix A). Then, subjects were introduced to the novel stand by an investigator, its features were discussed, and subjects were allowed to test and inspect the stand. Finally, subjects completed a structured interview assessing their satisfaction with the novel stand (Section 1.01(a)(i)Appendix A). Minitab and Excel were used to summarize and analyze gathered data. Cluster analysis was performed on the open ended questions presented in the interview.

4.0 RESULTS

This section presents summaries and analysis of data collected during the Warrior Games. Specifically, an attempt to identify a relationship between subject shooting history and satisfaction with the novel stand as made. Results from the cluster analysis are analyzed as well.

4.1 SUMMARY STATISTICS

All participants were male and Veterans and had diagnosis of: spinal cord injury (n=2), traumatic brain injury (n=3), amputation (n=3), back injury (n=1). One subject did not report their diagnosis. The age of participants ranged from 26 to 54 years with a mean of 37±3 years. The height of participants ranged from 60 to 74 inches with a mean of 69.2±1.4 inches and body weight ranged from 130 to 220 pounds with mean 190±32 pounds. A summary of demographic information is given in Table 7.

Subjects self reported their level of competition as beginner (n=5), advanced (n=4), or professional (n=1), and provided their classification as SH1 (n=3), SH2 (n=3), or SH3/other/unknown (n=4). Subjects identified the independent events in which they were participating at the Warrior Games; 10M rifle standing (n=6), 10m rifle prone (n=7), and 10m pistol (n=2). A summary of the subject's shooting experiences and related information is given in Table 8.

Table 7 summary of participant's demographic information

Variable		# of Subjects	Percentage
Ethnic Origin			
	American Indian/Alaskan native	1	10%
	Caucasian	6	60%
	Hispanic	2	20%
	Other	1	10%
Gender			
	Male	10	100%
Veteran			
	Yes	10	100%
Disability/Injury			
	SCI	2	20%
	TBI	3	30%
	Amputation	3	30%
	Back Injury, NOS	1	10%
	Other	1	10%
Hand Dominance			
	Right	8	80%
	Left	2	20%

Subjects reported if they possessed their own rifle (n=3), pistol (n=1), or shooting stand (n=2). Of the two subjects that possessed a personal stand, one was purchased commercially and the other was custom fabricated. Four subjects reported previous experience with adaptive air rifle shooting sports prior to the Warrior Games with a range of two to 30 years and mean 9.75±13.6 years and, one subject reported 30 years experience with adaptive air pistol. The hours spent per week training for shooting sports ranged from 0 to 40 hours with mean 11.6±11.7 hours per week.

Table 8 summary of subjects shooting related data

Variable		# of subjects	Percentage
Classification			
	SH1	3	30%
	SH2	3	30%
	SH3	4	40%
Level of Experience			
	Beginner	5	50%
	Advanced	4	40%
	Professional	1	10%
Events Participating			
	10m rifle standing	6	60%
	10m rifle prone	7	70%
	10m pistol	2	20%
Possess Equipment			
	Rifle	3	30%
	Pistol	1	10%
	Shooting stand	2	20%
Previous experience w/rifle			
	Yes	4	40%
	No	6	60%
Previous experience w/pistol			
	Yes	1	10%
	No	9	90%

Three subjects chose to fire using the stand and the rounds fired range from three to 10 shots with a mean 6±4 shots fired. The rounds were not scored. Subjects marked a line on a linear visual analog scale scored from zero to 100mm; zero corresponding with *disagree* and 100 corresponding with *agree*, for four questions. The distance was measured from the left side of the scale to the line marked by the subject with a scale. The questions and results follow: *the stand is rigid and stable enough to obtain a secure position* ranging from 4.1 to 100 with a mean of 58.1±34.8; *the table top padding is too soft to maintain a stable firing position ranging* from 4.5 to 89.9 with mean 37.8±29.2; *the seat is too soft to obtain a stable/comfortable position that I*

can maintain for an entire competition produced a range of 0 to 41 with mean 11.3±13.7*; I would prefer to use this stand instead of the current stands commercially available* ranging from 1.9 to 100 with mean 64.2±37.1. A box plot presented in Figure 27 and Table 9 provides a summary of the data.

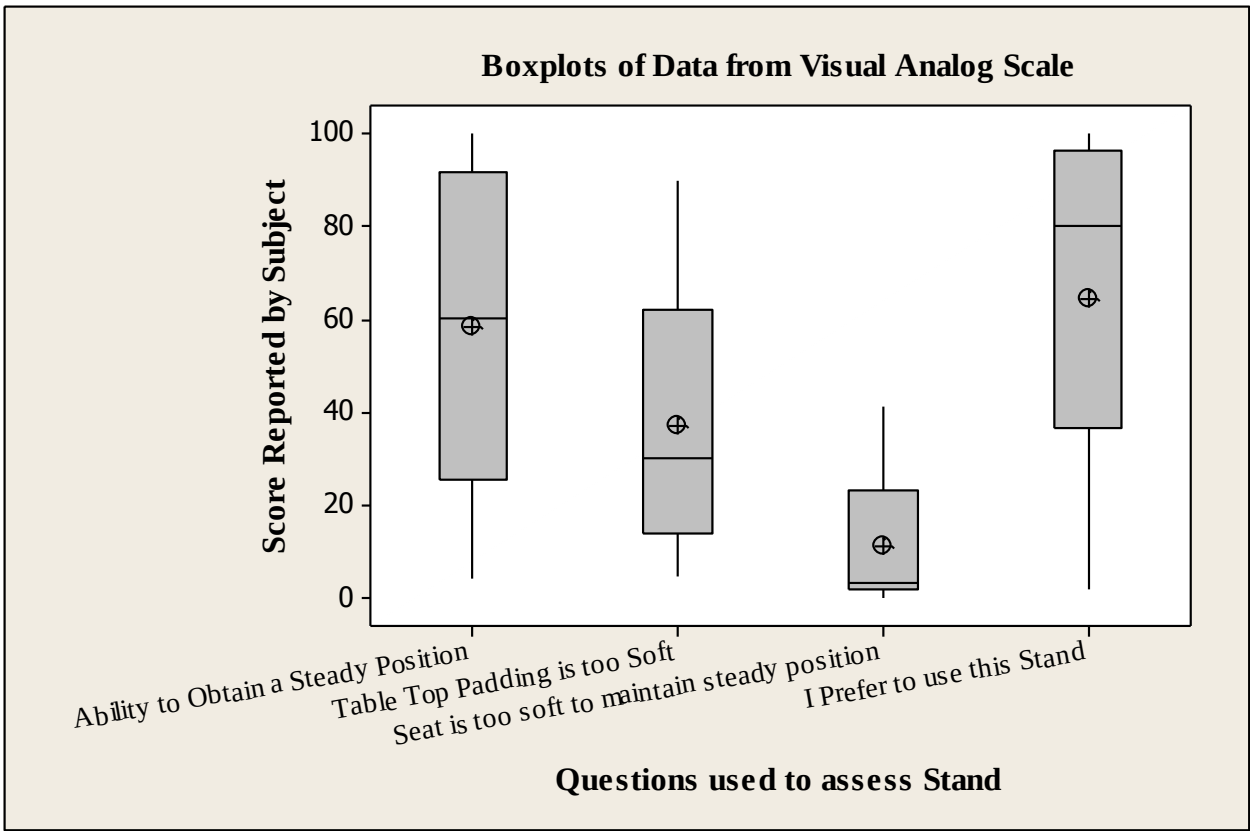

Figure 27 box plot of four variables assessed by questionnaire

Table 9 descriptive stats of four variables assessed by questionnaire

Variable				
Question #		**Range**	**Mean**	**Median**
1	stand is rigid and stable enough to obtain a secure position	4.1 to 100	58.1±34.8	60
2	table top padding is too soft to maintain a stable firing position	4.5 to 89.9	37.8±29.2	30
3	seat is too soft to obtain a stable/comfortable position that I can maintain for an entire competition	0 to 41	11.3±13.7	3.25
4	prefer to use this stand instead of the current stands commercially available	1.9 to 100	64.2±37.1	80

Figure 28 presents a scatter plot with best fit line of an athlete's perceived ability to obtain a steady position (question one presented in Table 9) using the shooting stand versus previous experience with adaptive shooting sports (demographic data contained in Table 8). Four subjects reported previous experience with adaptive air rifles with a range from 2 to 30 years and mean 9.6±11.8. The subject with 30 years of experience in shooting reported the lowest score of 1.9, which is 1.7 standard deviations below the mean, for *the stand is rigid and stable enough to obtain a steady position*.

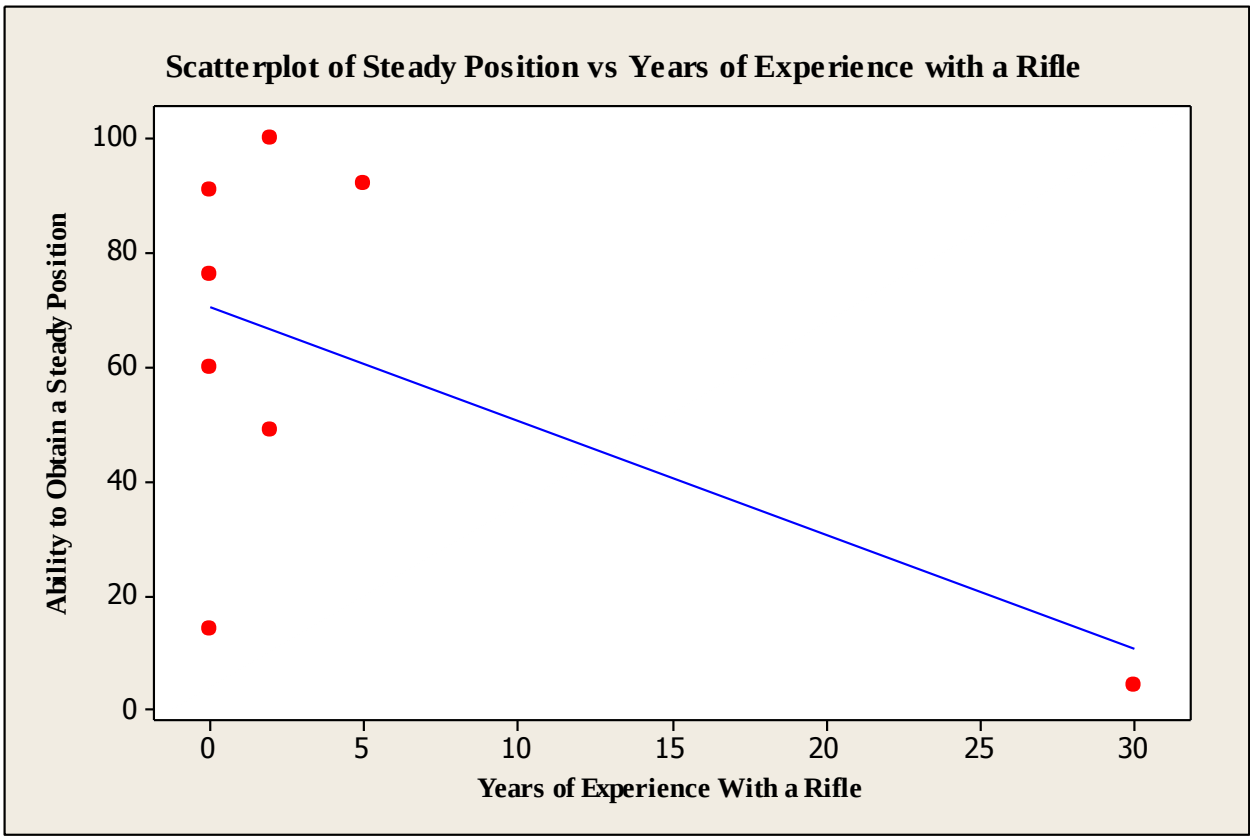

Figure 28 subjects perceived ability to obtain a steady position vs. years of experience

Figure 29 ability to obtain a steady position vs. years of experience with influential observer omitted

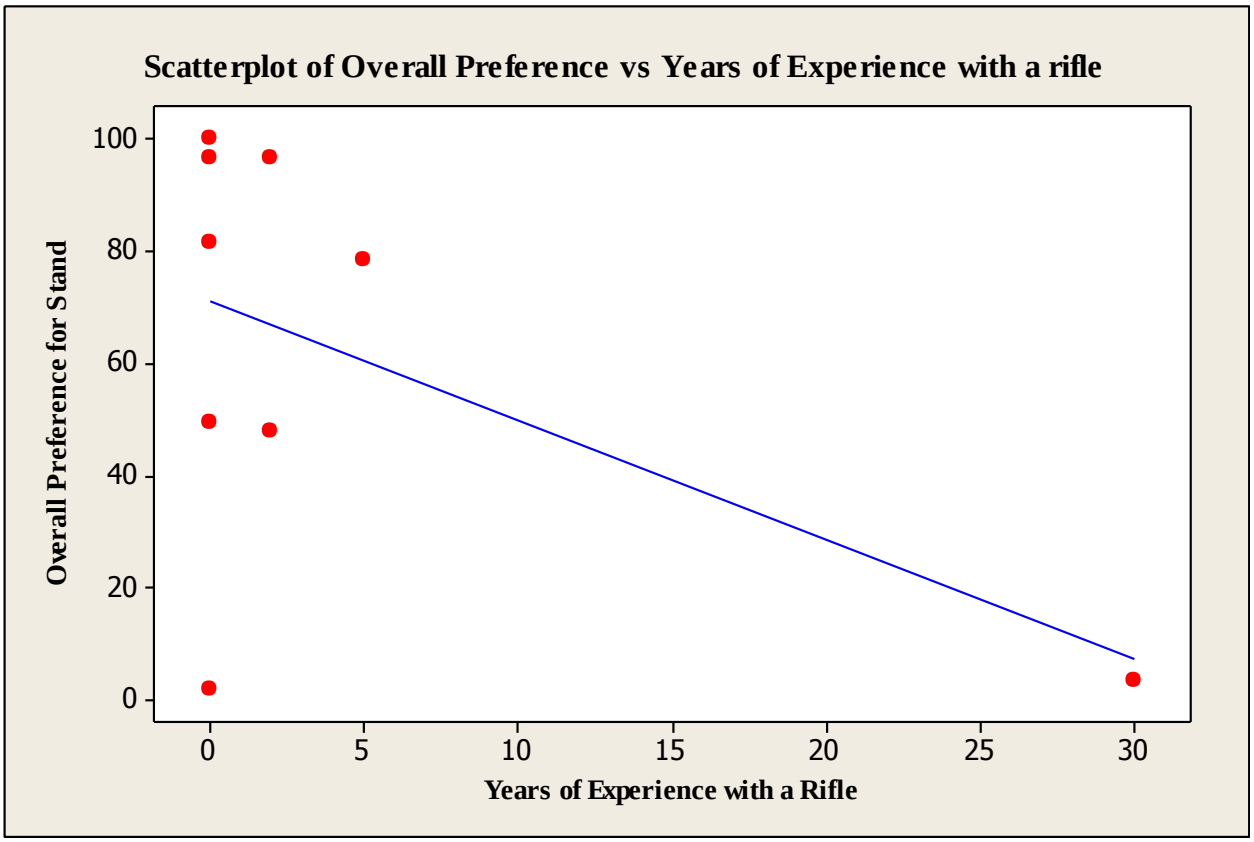

Figure 30 overall preference for the shooting stand versus years of experience with a rifle

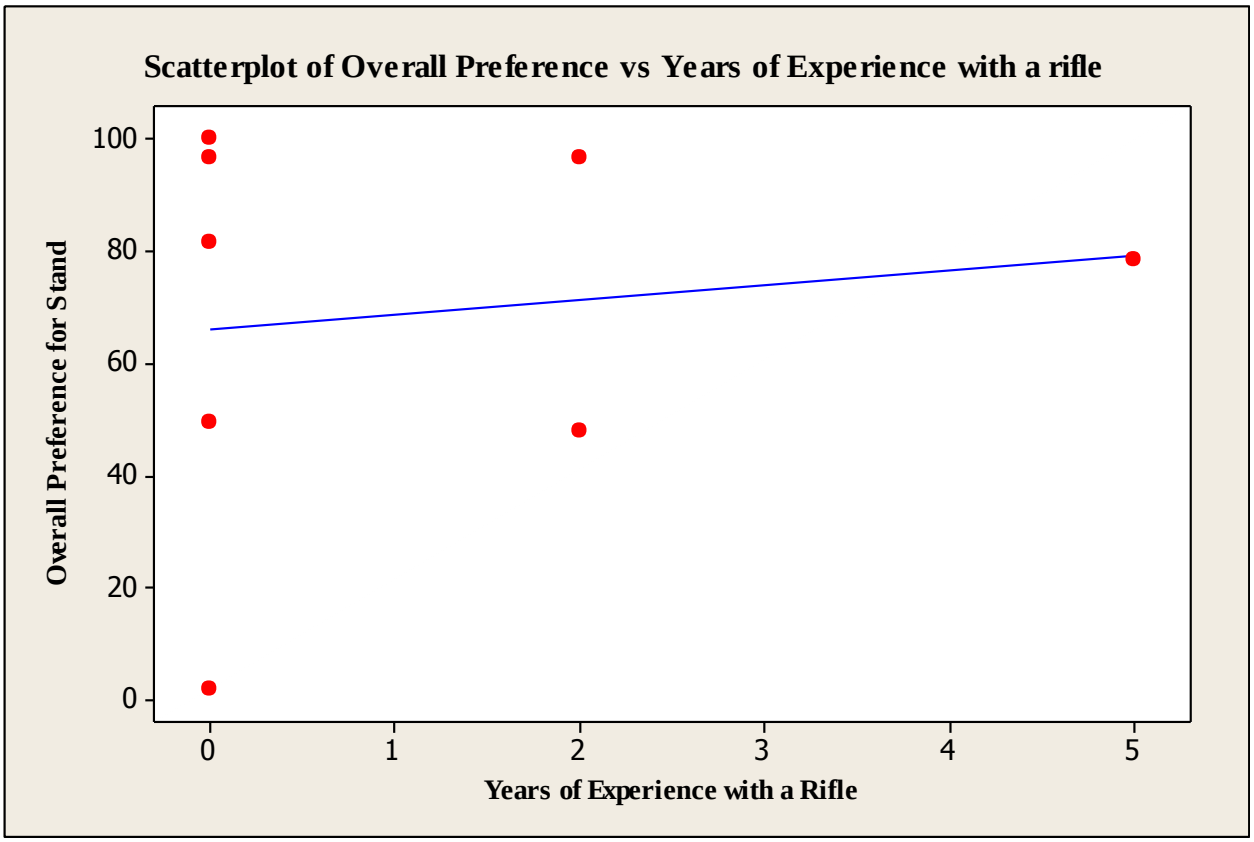

Figure 31 overall preference for the shooting stand versus years of experience with a rifle with influential observer removed

4.1.1 Cluster Analysis Results of Six Open Ended Questions (Section 1.01(a)(i)Appendix A)

4.1.1.1 Comments on Positioning

Subjects were asked *could you comment on your positioning (posture, stability, comfort) while using the shooting stand, what did you like/dislike about your positioning, and if not satisfied, what would improve posture/positioning*? This question was responded to by 90% of subjects. The responses to this question were grouped into those that were negative and those that were positive with subtopics identifying notable differences. Negative responses included those that

report a need for improvement or an incompatibility with the athlete's personal preference for obtaining a steady firing position. Positive responses included those that allowed the subject to obtain a desirable position. Negative responses were provided by 66% of subjects with a majority of concerns regarding the lack of correct table top height and the instability of the table top. The remaining subjects stated that the stand was adequately sized and more stable than current technology.

4.1.1.2 Comments on Features liked

The following question, *what features of the shooting stand did you like best and why,* was responded to by 60% of subjects and two general categories were identified; comfort and transportability. Comments that corresponded to comfort comprised 83% of responses and were attributed to the size or design elements. Transportability was identified by 50% of respondents as a notable feature and included attributes such as the low overall weight of the stand and compact design.

4.1.1.3 Comments on Features Disliked

What features did you dislike and why was responded to by 50% of subjects and 100% of respondent comments regarded the table top. Instability was identified as a largely negative factor by 67% of respondents and the remaining comments addressed dissatisfaction with the padding and height.

4.1.1.4 Comments on the addition of Features

Subjects were asked *what features would you add and why,* and this question was answered by 70% of subjects; 86% of those that answered suggested the incorporation of adjustable features.

An adjustable table and seat height was identified by 57% of subjects, and 43% expressed interest in a seat and table that would "swivel". Additional comments included the desire for a larger table top as well as more support for the existing table top.

4.1.1.5 Comments on shooting Stand Comparison

Subjects were then asked *if you have used another shooting stand, how does this stand compare and why?* This question was responded to by 40% of subjects and 50% of those that responded reported that this stand was more stable than current technology or stand that they had utilized. Eight comments were provided in total and 38% identified areas for improvements including an integrated rifle stand and undesirable table top dimensions. Remaining comments identified stand stability as a feature superior to existing technology. One respondent reported that he used a custom stand which he prefers over the novel shooting stand; he reports that his stand is light weight and fits in his shooting bag.

4.1.1.6 Additional Comments

Finally, subjects were asked *are there any other comments you would like to make regarding the shooting stand or your own shooting stand* and comments were provided by 40% of subjects. The table top was referenced by 33% of the comments; 50% requesting increased adjustability of the table top and 50 addressing the size and padding. Respondents identified the shooting stands inclination to tilt backward and 17% suggested addressing the design to correct this. Of the remaining 50% of comments, 33% were addressed to comfort which included improvements to seat cushion and the inclusion of a backrest, and 50% of comments suggest the need for increased adjustability.

5.0 DISCUSSION

5.1.1 Statistics

Results from the questionnaire suggest that the majority of subjects were satisfied with their ability to obtain a steady position. However, the spread is very large. The spread may be due to personal preference or skill level. Figure 28 suggests that an increase in years of experience with adaptive shooting sports and satisfaction with perceived ability to obtain a steady position have a strong negative correlation. However, a positive correlation is revealed in Figure 29 between the two variables if the subject with 30 years of experience is used. This subject is considered an influential observer because he is a wheelchair user and would typically compete with a wheelchair mounted table-top. He reported that he uses a custom shooting stand which may attribute to the negative score that he reported.

The majority of subjects agreed that the table top padding was not too soft and did not interfere with an ability to obtain a steady position. This data too possessed a large spread suggesting the possibility of a difference in personal preference or ability. The box plot data for seat padding comfort (Figure 27) has the least amount of spread and a median that strongly suggest the padding meets its goal of allowing participants to obtain a steady position for an extended period of time while maintaining an acceptable level of comfort.

The data provided for overall preference for the shooting stand (Figure 27) had the largest standard deviation and range but a median suggesting most subjects preferred this stand compared to other shooting stands. Analysis of the scatter plot of preference for this shooting stand versus years of experience with a rifle presented in Figure 30 suggests a strong negative correlation between the variables, but this assumption is challenged by Figure 31 with the outlier removed. This outlier also strongly influences the standard deviation contributing to the spread in Figure 27. There is a strong negative correlation between years of experience and ability to obtain a steady position unless the influential observer, is omitted which then produces the scatter plot in fFigure 29 demonstrating a positive correlation between the variables. Figure 30 presents a regression of subjects overall preference for the stand versus years of shooting experience and Figure 31 presents the data with the outlier removed.

Analysis of open ended questions (Section 1.01(a)(i)Appendix A) reveals that table top stability and shooting stand adjustability require improvement. Poor table top stability was a topic that appeared in four of the six open ended questions in section 4.1.1 indicating that this is a reliable suggestion for an area that requires improvement. Increased adjustability was also a topic that appeared in four of the six questions indicating that is also a factor for consideration. Data from the structured interview has much bias because not all subjects answered the prompts. This resulted in few subjects influencing the results whether they were interpreted as positive or negative factors.

5.1.2 Prototype/Design Criteria

The novel shooting stand meets IPC equipment standards discussed in section 1.1.1.3. The table height of the novel stand is .75” higher than the clients and the length from front to back is .50”

shorter than the clients. The table tops are the same dimensions. The novel stand reduces its foot print by ten square inches. The overall dimensions of the novel stand are nearly identical to the client's current stand. However, the novel stand has a cross sectional diameter of 3" throughout while the clients current stand is constructed from 1.25" aluminum square tubing. Therefore the novel stand occupies significantly more space when disassembled and stored in an equivocally sized case than the client currently uses for transportation. Although, the novel stand weighs 15% lighter than the clients current stand (Table 6).

Subject data collected from page two of the questionnaire, (Section 1.01(a)(i)Appendix A), that the stand is "Rigid and stable enough to obtain a steady position", and presented in Figure 27, suggests that the stand may not possess an acceptable amount of rigidity. However, a majority of comments provided during the interview, and presented with analysis in section 4.1.1, identify lack of table top stability as a leading cause of dissatisfaction. The carbon fiber table top that was used during testing has been replaced by a plywood table top and the difference in deflection is presented in Figure 25. The wooden table deflects less under a load than the carbon fiber table. This suggests that the table top design, rather than the shooting stand design, is responsible for the dissatisfaction with stand rigidity.

5.1.3 Limitations

This study was conducted using a convenience sample and is subject to bias. All subjects were male and veterans and do not adequately represent the IPC population. Because 50% of subjects reported that they are new to adaptive shooting and may have little experience with other adaptive shooting stands (Table 8), their assessment of the novel stand compared to existing

technology may be biased. The investigator was also present during the study and may have influenced the subject's responses.

Furthermore, testing was conducted in a manner that did not allow subjects an optimal amount of time to assess the stand; subjects concluded that the seat and table top padding would allow them to comfortably assume and maintain a firing position for an extended period of time (Figure 27) after a brief assessment. Subjects also lacked the time necessary to make adjustments to the shooting stand to better suit their personal preference and may have negatively influenced subject feedback.

5.1.4 Future Work

A shooting stand with a smaller cross sectional diameter and enhanced cross sectional design will further reduce weight and volume required to store the disassembled stand. An ergonomic table top design should be considered for athlete comfort and performance enhancement. An integrated rifle support stand and level were not included in the prototype and this criterion was not met. Furthermore, the design as it currently exists requires much dexterity to adjust the height of the stand and adjustable feet with accessibly features should be considered.

Future studies should comprise side by side comparisons of shooting stands, and a future study should be conducted with the redesigned, wooden table top. Analysis of the data collected with the influential observer removed may also yield distinct differences and should be considered. The time required for athletes to assemble the shooting stand was not assessed during subject testing and should be formally assessed as well.

The universality of the shooting stands design should be assessed. The stand should be considered for use by athletes with disabilities and their able bodied counter parts. Furthermore,

the shooting stand may increase accessibility for people with disabilities at public shooting ranges, and market and community research should be conducted to determine if this is a reasonable assumption.

APPENDIX A

SURVEY QUESTIONAIRRE

Subject ID: _____

Evaluation at the Warrior Games of an Adaptive Shooting Stand for Athletes Competing in Air Rifle Events

Interview

1.) Could you comment on your positioning (posture, stability, comfort) while using the shooting stand?

   a.
   b. What did you like/dislike about your positioning (did the stand make it difficult to obtain a steady position)?

   c. If not satisfied, what would improve posture/positioning?

2.) What features of the shooting stand did you like best, why?

3.) What features did you dislike, why?

4.) What features would you add, why?

Subject ID: _____

5.) If you have used another shooting stand, how does this stand compare, why?

6.) Are there any other comments you would like to make regarding the shooting stand or your own shooting stand?

Subject ID: _____

Evaluation at the Warrior Games of an Adaptive Shooting Stand for Athletes Competing in Air Rifle Events

Questionnaire

Date: _____/_____/_____

Age: _____

Gender: ☐ Male ☐ Female

Disability or Injury Level: _____

Date of Disability Onset or Injury: ____/____/____

Ethnic Origin:

☐ Black or African American ☐ Asian ☐ White or Caucasian

☐ Hispanic or Latino ☐ American Indian or Alaskan Native ☐ Native Hawaiian or other Pacific Islander

☐ Two or more races

Body weight: _____

Height: _____

Which is your dominant hand? ☐ Right ☐ Left

Do you own your own air rifle/pistol? ☐ Yes ☐ No

Do you own your own shooting stand? ☐ Yes ☐ No

If yes,
Shooting Stand Make: _____
Model: _____

Where did you obtain the stand from?
_____

Other than the Warrior Games, have you competed in *adaptive* **shooting competitions/sports?**

☐ No
☐ Yes

If yes, how many years experience do you have with the following?

	Years
Rifle	_____
Pistol	_____

Page 1 of 2

Subject ID: _____

What is your shooting classification (if applicable/known)?

☐ SH1 ☐ SH2 ☐ Other _____

Which best describes your level of competition? ☐ Beginner ☐ Advanced ☐ Professional

About how many hours a week do you engage in training specific to shooting sports? _____

Which events did you/will you participate in during the Warrior games?

☐ 10m Air Rifle Standing ☐ 10m Air Rifle Prone ☐ 50m Rifle Prone
☐ 50m Rifle 3 positions ☐ 10m Air Pistol ☐ 25m Pistol
☐ 50m Pistol ☐ Other _____

Please place a mark on the line that follows the question. You may place the mark anywhere on the line. The left side of the line indicates that you strongly disagree. A mark in the middle indicates that you neither agree nor disagree, and the far right side indicates that you strongly agree. A mark anywhere between these two points indicates a more precise indication of your satisfaction. Place the mark according to which degree you agree or disagree.

Example:
The temperature outside today is uncomfortably hot.

Disagree Neutral Agree

The stand is rigid and stable enough to obtain a steady position

Disagree Neutral Agree

The table top padding is too soft to maintain a stable firing position

Disagree Neutral Agree

The seat is too soft to obtain a stable/comfortable position that I can maintain for an entire competition

Disagree Neutral Agree

I would prefer to use this stand instead of the current stands commercially available

Disagree Neutral Agree

Page 2 of 2

BIBLIOGRAPHY

Abras, C., Maloney-Krichmar, D., & Preece, J. (2004). User-centered design. *Bainbridge, W. Encyclopedia of Human-Computer Interaction. Thousand Oaks: Sage Publications, 37*(4), 445-456.

Centers for Disease Control and Prevention. (1996). A Report of the Surgeon General: Physical Activity and Health. Persons with Disabilities.

Department of Veterans Affairs. (2012a). National Veterans Wheelchair Games Event Information. from http://www.va.gov/opa/speceven/wcg/docs/event.asp

Department of Veterans Affairs. (2012b). National Veterans Wheelchair Games History. from http://www.va.gov/opa/speceven/wcg/docs/history.asp

Foth, B. (2011). [Shooting Stands: Personal Communication].

Gilder-Cooke, S. (2012). The Games Come Home: Tracing the Paralymipcs' British Roots. http://olympics.time.com/2012/09/03/the-games-come-home-tracing-the-paralympics-british-roots/

Goff, M. (2012). Adapted Sport Programs for Veterans with Disabilities. *Journal of Physical Education, Recreation & Dance, 83*(3), 1-60.

International Paralympic Committee. TeamUSA Paralympics: Military. from http://www.Teamusa.org/US-Paralympics/military.aspx

International Paralympic Committee. (2007). IPC Classification Code and International Standards. In International Paralympic Committee General Assembly (Ed.). Bonn, Germany.

International Paralympic Committee. (2011). IPC Shooting Rules and Regulations.

International Paralympic Committee. (2013a). Official Website of the Paralympic Movement. Retrieved 10 January, 2013, from http://www.paralympic.org

International Paralympic Committee. (2013b). Paralympic Sports/Shooting. 2012, from http://www.paralympic.org/sport/shooting

International Shooting Sport Federation. (2013). ISSF Rule Book.

IPC. *IPC Handbook_Ch2*.

IPC Shooting. (2011). IPC Shooting Rules and Regulations (pp. 38).

IPC Shooting. (2012). IPC Shooting: Classification Rules and Regulations.

Moses, J., Steptoe, A., Mathews, A., & Edwards, S. (1989). The effects of exercise training on mental well-being in the normal population: A controlled trial. *Journal of Psychosomatic Research, 33*(1), 47-61. doi: http://dx.doi.org/10.1016/0022-3999(89)90105-0

O'Neill, S., & Maguire, S. (2004). Patient perception of the impact of sporting activity on rehabilitation in a spinal cord injuries unit. *Spinal cord, 42*(11), 627-630.

Olson, J. (2011). [Army Marksmanship Unit: Personal Communications].

Paralyzed Veterans of America. (2013). Paralyzed Veterans of America. from http://www.pva.org/site/c.ajIRK9NJLcJ2E/b.6305401/k.BCBB/Home.htm

Preece, J. (2000). *Online communities: Designing usability and supporting socialbilty*: John Wiley & Sons, Inc.

Tasiemski, T., Kennedy, P., Gardner, B., & Taylor, N. (2005). The association of sports and physical recreation with life satisfaction in a community sample of people with spinal cord injuries. *NeuroRehabilitation, 20*(4), 253-265.

Team USA. (2013). TeamUSA/Paralympic Sport Clubs. Retrieved January, 2013, from http://www.teamusa.org/us-paralympics/community/paralympic-sport-clubs.aspx

Tweedy, S. (2009). Layman's Guide to Paralympic Classification. In I. P. C. G. Assembly (Ed.), *IOC Handbook of Sports Medicine and Science*: Wiley-Blackwell.

United States Olympic Committee. (2013). Warrior Games presented by Deloitte. from http://www.teamusa.org/US-Paralympics/Military/Warrior-Games-presented-by-Deloitte.aspx

USA Shooting. (2012). USAS Bylaws.

Yancosek, K., Daugherty, S., & Cancio, L. (2008). Treatment for the Service Member: A Description of Innovative Interventions. *Journal of Hand Therapy, 21*(2), 189-195. doi: http://dx.doi.org/10.1197/j.jht.2007.12.002